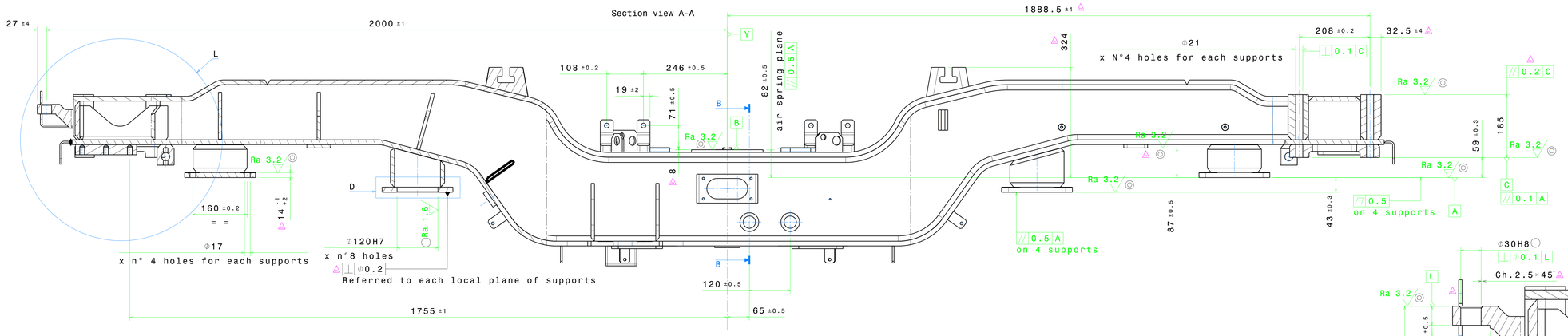

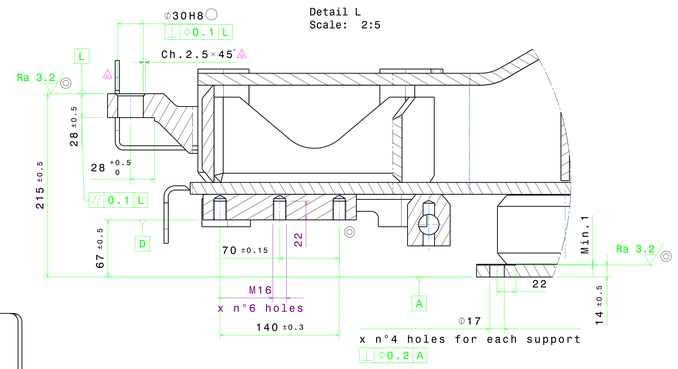

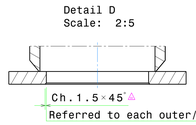

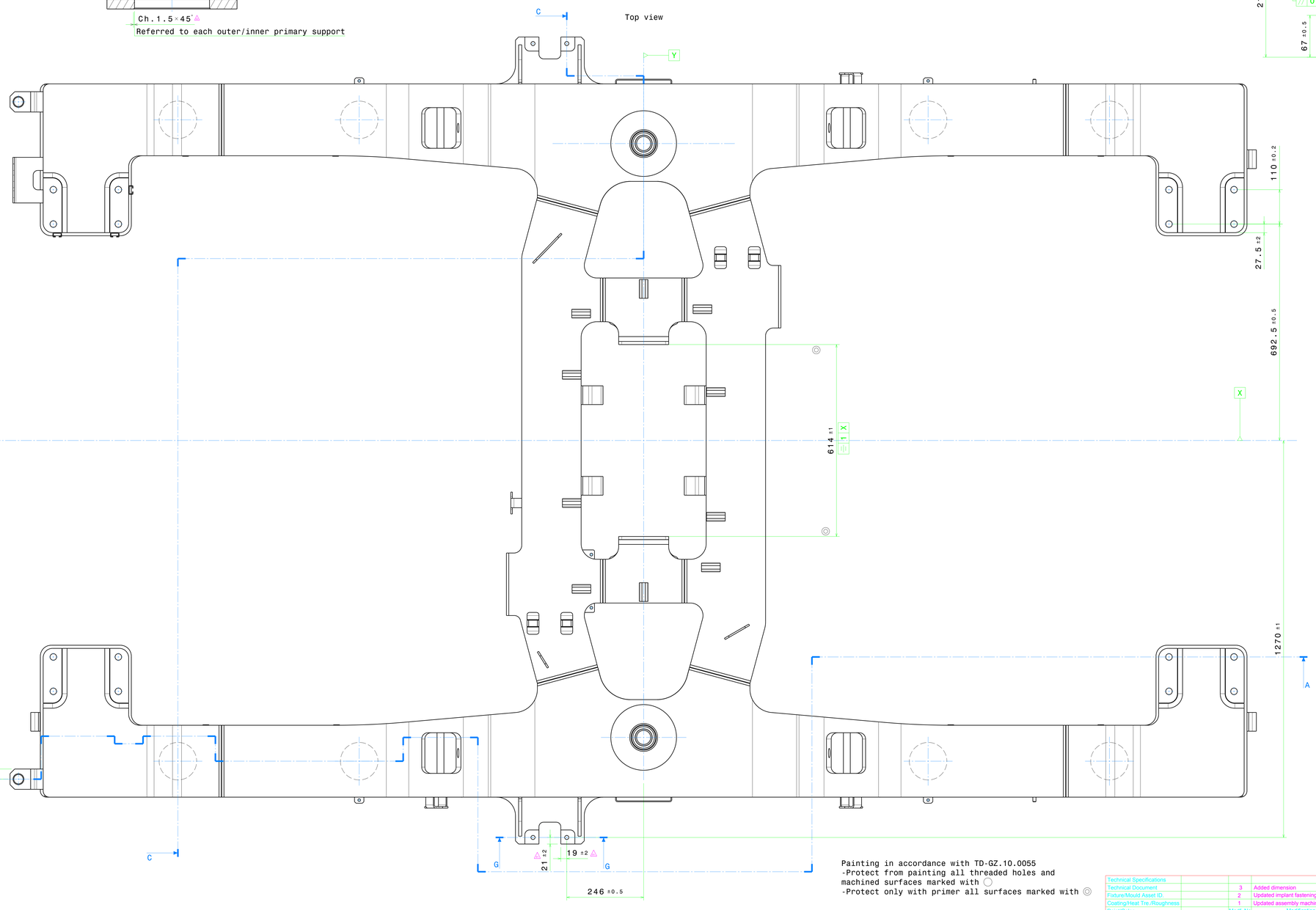

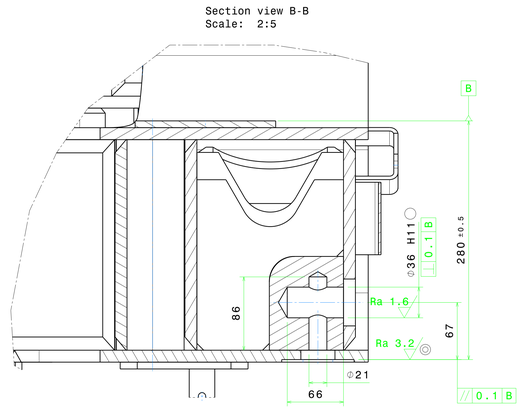

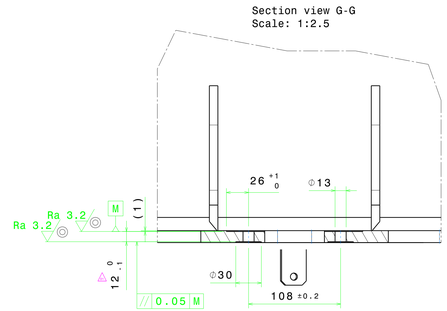

Painting in accordance with TD-GZ.10.0055
-Protect from painting all threaded holes and machined surfaces marked with ◯
-Protect only with primer all surfaces marked with ◎

Technical Specifications					
Technical Document		3	Added dimension	30/10/2023	S.Pinzzo
Fixture/Mould Asset ID.		2	Updated implant fastening and assembly machining	22/06/2023	D.Carlino
Coating/Heat Tre./Roughness		1	Updated assembly machining and dimensions	07/12/2022	D.Carlino
Paint/Color	-	Modf. No	Modification Description	Date	Sign

1625,5

No	Parça Adı / Designation Name of Item	Adet / Qty.	Resim No / Norm / Drawing No / Norm	Malzeme / Material	Ölçü / Dimension	Ağırlık / Weight (Kg)

ISO 21920-1	ISO 8015	ISO 2553	General Tol.	ISO 2768	f☐	m☒	H☐	K☒
EN 15085-2 Certification Level		CL1☐ CL2☐ CL3☐	Weld Pro. Cast Steel	ISO 13920	A☐	B☐	C☐	F☐
				ISO 12708	Lm2☐	Lr2☐	Sm2☐	Sr2☐

Approved	L. Giovinazzo	07/12/2022	Scale
Checked	M.Borlo	07/12/2022	1:5
Prepared	D.Carlino	07/12/2022	

TYP

Trailer bogie frame machined

-

TURASAS
Turkish Railway Vehicles Industry Inc.

GZ11.04.03.10000

Date: 30/10/2023 | Sheet : 1/2 | Size:A0 | Rev: 03

ISO 2768 General Geometric Tolerances - Part 1: Linear, Angular		
<1000	6,0	0,8
<630	4,0	0,7
<400	3,0	0,6
<250	3,0	0,4
100	2,0	0,3
40	1,5	0,2
L mm	Hani Yaz.	
Nom. Size	Class	
<4000	2,0	0,4
<2000	1,2	0,4
<1000	0,8	0,3
<400	0,5	0,3
30-120	0,3	0,2
2-30	0,2	0,1
L mm	m ±	K ±
Nom. Size	Class	

ISO 2768 General Geometric Tolerances - Part 2: Form Tol. Casting		
>20000	9,0	8,0
>20000	8,0	7,0
<16000	7,0	6,0
<12000	6,0	5,0
<8000	5,0	4,0
<4000	4,0	3,0
<2000	3,0	2,0
<1000	2,0	1,5
<400	1,0	1,0
30-120	1,0	0,5
2-30	1,0	0,5
L mm	A ±	E ±
Nom. Size	Class	

Reproduction, dissemination or use of this document or its all contents in any form without the prior written permission of TURASAS is prohibited. Offenders will be liable for the payment of damages. All rights reserved in the event of the grant of a patent, utility model or registration of industrial design legislation.